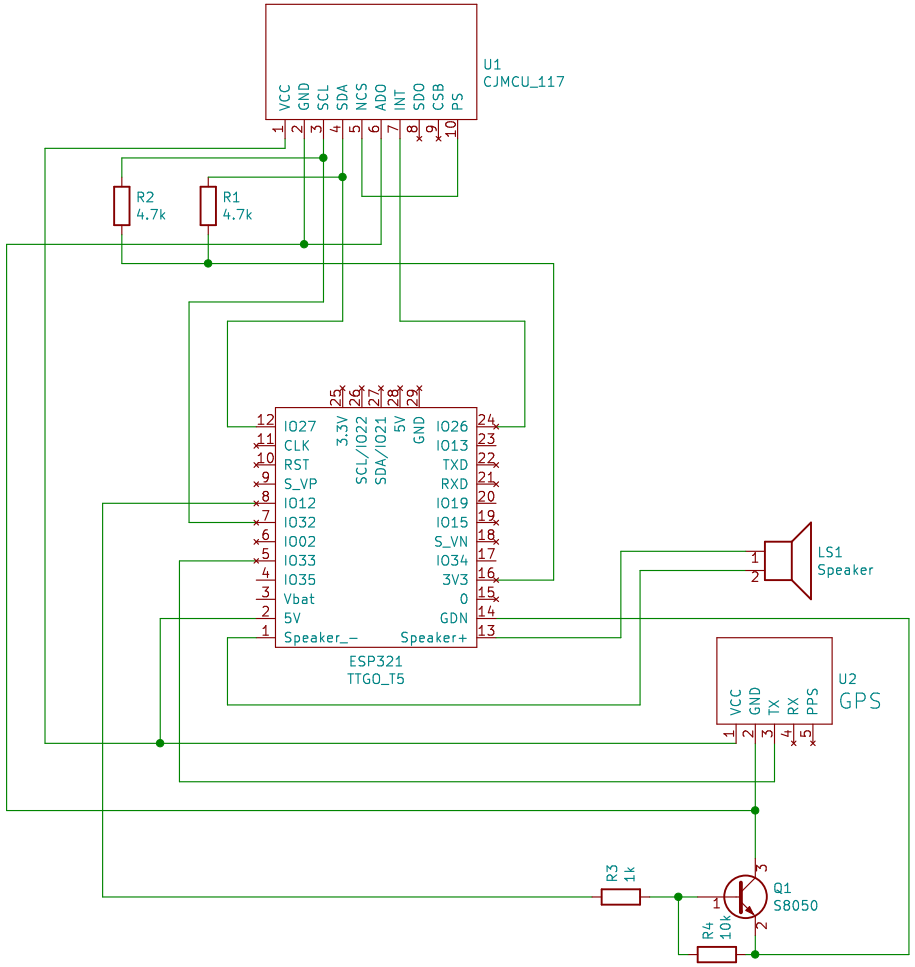

Ratamuse

Sheet: /

File: Gnu Vario TTGO T5 V2.sch

Title: GNU Vario for TTGO T5

Size: A4	Date: 2019-10-17	**Rev: V 2.0**
KiCad E.D.A. eeschema (5.0.1)-3		Id: 1/1